JAN L.G. DIETZ

RED GARDEN GNOMES DON'T EXIST

IN SEARCH OF THE ESSENCE OF ORGANISATION

ALICIA P.C. PERINFORMA

THE ESSENCE OF ORGANISATION

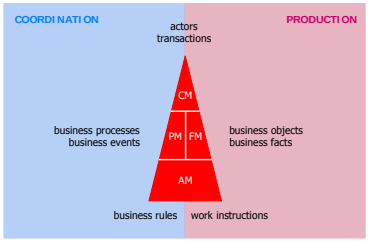

AN INTRODUCTION TO ENTERPRISE ENGINEERING

JAN L.G. DIETZ

DEMO BASIS - GLOSSARY OF TERMS

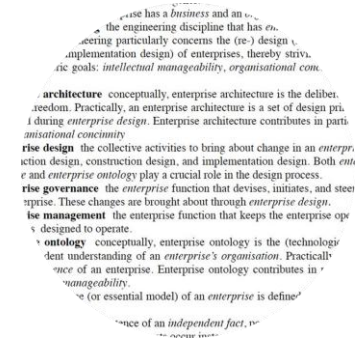

Vraag 1 (Niels Kamper)

Is het niet zo dat door het samenbrengen van de feiten en de onderlinge uitwerking(en) er een nieuwe situatie kan ontstaan? Een situatie die – bekeken vanuit de losse feiten- radicaal anders is.

Ik kan waarnemen dat men 3 potten verf (geel, rood en blauw) in een bak kiept, maar door het samenbrengen van deze 'feiten' ontstaat er een situatie (bruin) die niet herleidbaar is naar de eerste waarnemingen. Dit voorbeeld is behoorlijk rudimentair, aangezien iedereen weet dat deze kleurcombinaties een nieuw resultaat oplevert.

De reden dat ik mijn vraag stel is omdat het me opvalt dat organisaties zeer regelmatig handelen op basis van de losse feiten of waarnemingen. Men is niet in staat om een zekere causaliteit of interactie te zien tussen de verschillende waarnemingen.

Ik ben dan ook erg benieuwd hoe abrupte alteraties in omstandigheden worden opgevangen binnen de DEMO methodiek.

The Essence of Organisation

Lecture 2

Jan L.G. Dietz

THEORY

PSI

The ψ-theory: organisation

ψ (PSI) stands for Performance in Social Interaction. Primarily rooted in Habermas' social theory and Bunge's systemic ontology.

- The operating principle of organisations is that *human beings* enter into and comply with *commitments* regarding the production of things. They do so in *communication*, and against a shared background of cultural norms and values.

- Commitments occur in processes that follow the *universal transaction pattern*. This is a structure of *coordination acts/facts* between two actors, concerning one *production act/fact*. One is the *initiator* (consumer) and the other one the *executor* (producer).

- An organisation is a network of actors and transactions. Every actor has a particular *authority*, assigned on the basis of *competence*. Actors are assumed to exercise their authority with *responsibility*. They operate *autonomously*.

Vraag 2

Geldt de PSI-theorie voor elke organisatie? Zo ja, waarom? Zo nee, waarom niet?

The ψ-theory: coordination

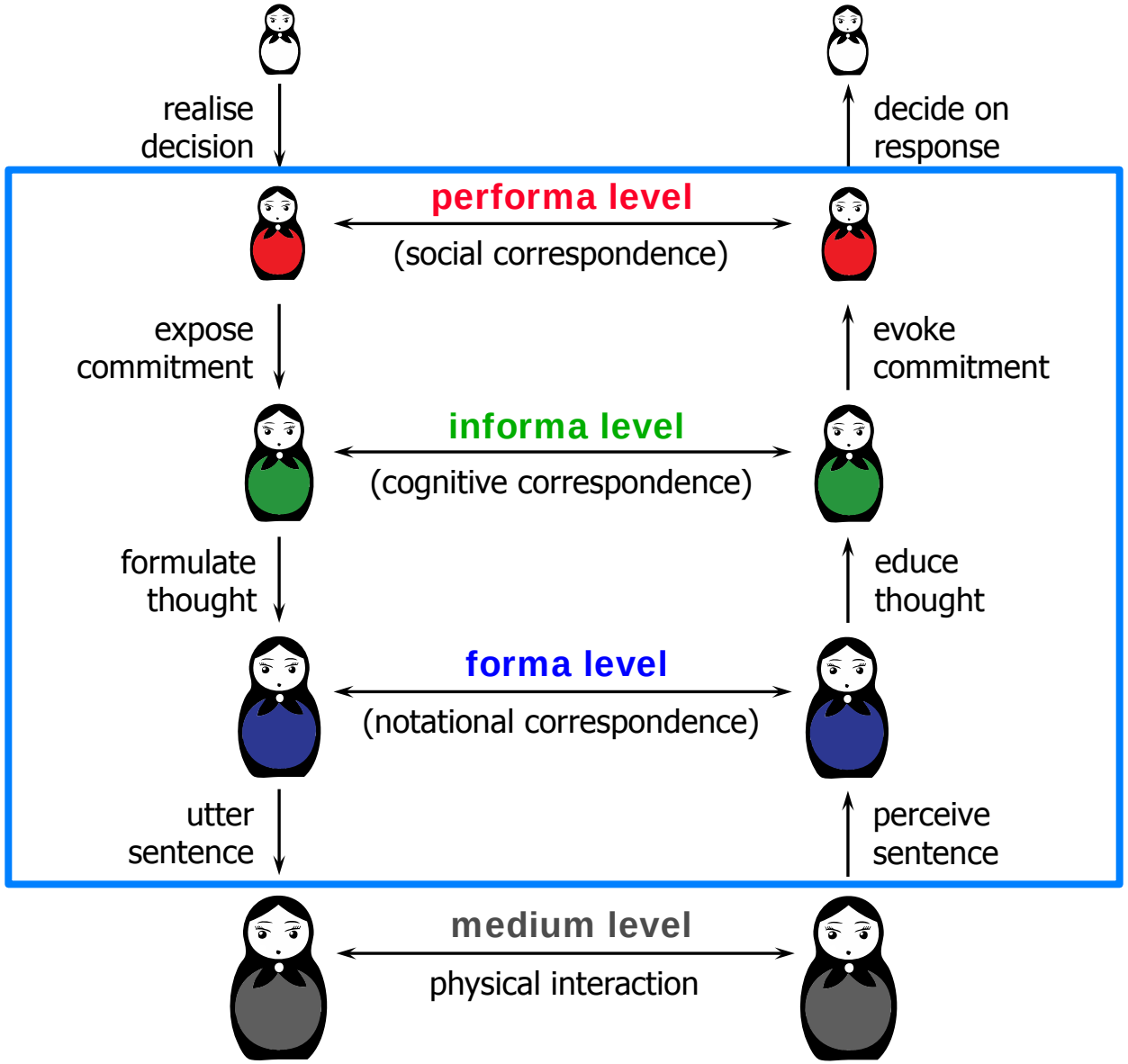

PSI: face side (social devotion)

PSI

Performance in Social Interaction

Claim to justice

Has the performer the right social position to perform the coordination act?

Claim to sincerity

Is the performer sincere in performing the coordination act?

Claim to truth

Does the production fact exist or can it be made to exist?

The transaction process

In the **proposition phase**, the actors discuss the ***product*** *to be produced*, and try to come to agreement

In the **execution phase**, the executor *produces some* ***product***

In the **result phase**, the actors discuss the ***product*** *that has been produced*, and try to come to agreement

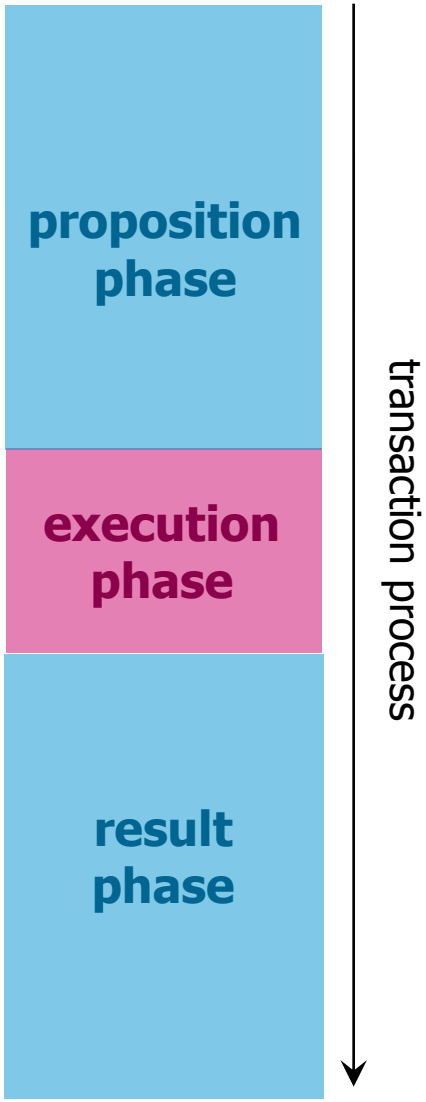

Asking for flowers
Ordering a book
Applying for membership

Creating
Deciding
Judging

Having got the flowers
Having got the book
Having become member

PSI: back side (intellectual manageability)

ISP

Integral System Performance

Universal Transaction Pattern
Every 'production process' is a path through the UTP

Distinction between performa/informa/forma level in coordination (with initial focus on performa level)

Distinction between performa/informa/forma level in production (with initial focus on performa level)

The standard transaction pattern

rq: request
pm: promise
dc: decline
qt: quit

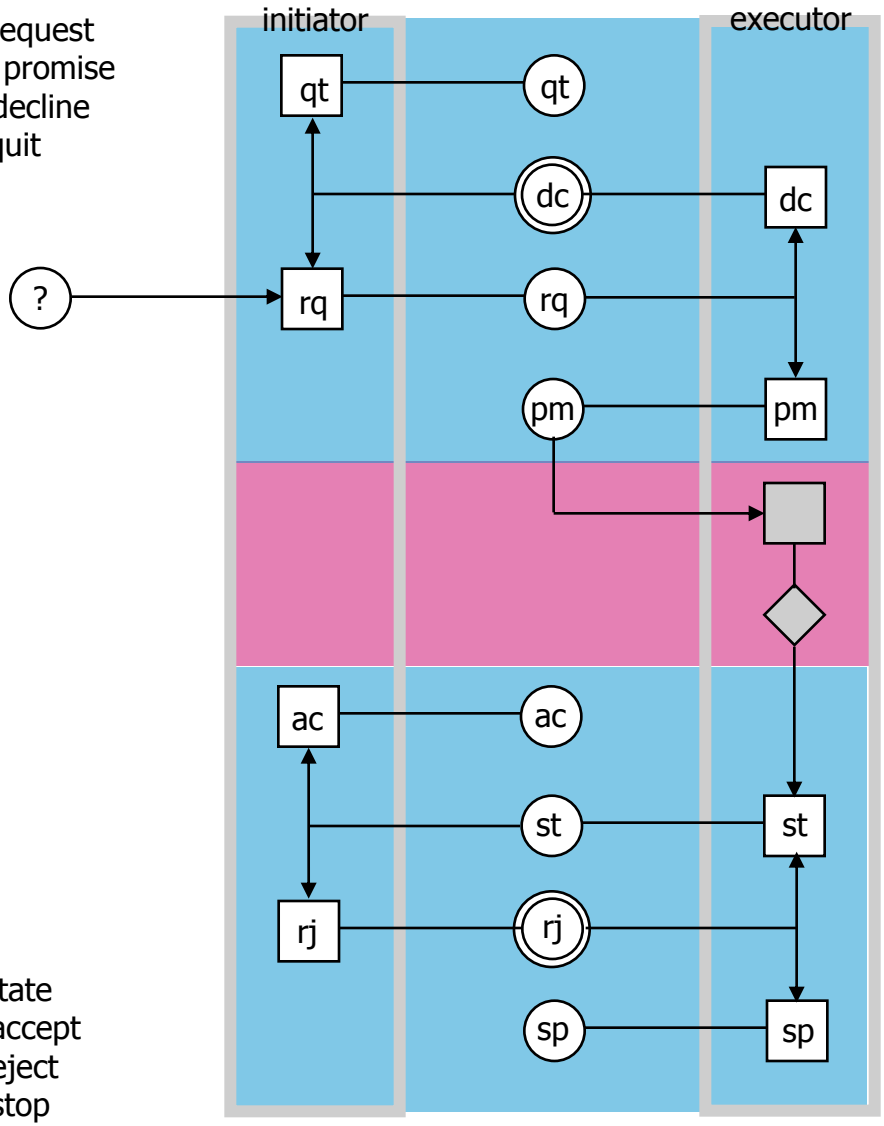

st: state
ac: accept
rj: reject
sp: stop

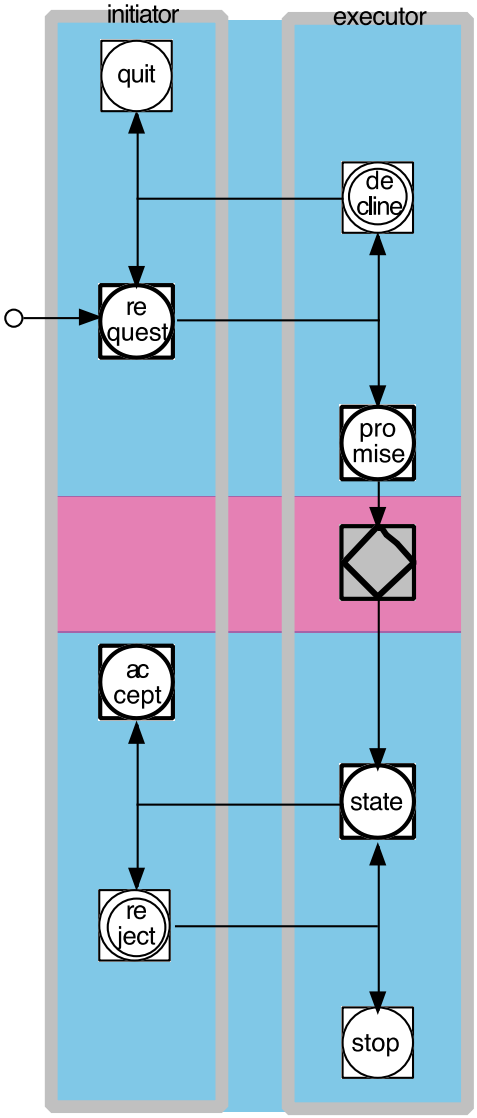

SAPIO

Non-verbal and tacit communication

Alicia: *I'd like to have a bouquet of red tulips*

Alicia : request : Celestine : order 387 is fulfilled

Celestine: *Just a moment*

Celestine : promise : Alicia : order 387 is fulfilled

proposition

Celestine: *Here you are*

Celestine : state : Alicia : order 387 is fulfilled

Alicia: *Thanks*

Alicia : accept : Celestine : order 387 is fulfilled

result

SAPIO

The ψ-theory: production

The three human *abilities* also apply to *production*:

Performa

The ability to perform ***original*** production acts, such as to *create (manufacture, transport, observe), decide, judge*.

Informa

The ability to perform ***informational*** production acts, such as to *remember, recall, compute* (facts)

Forma

The ability to perform ***documental*** production acts, such as to *store, retrieve, transmit, copy* (sentences, documents).

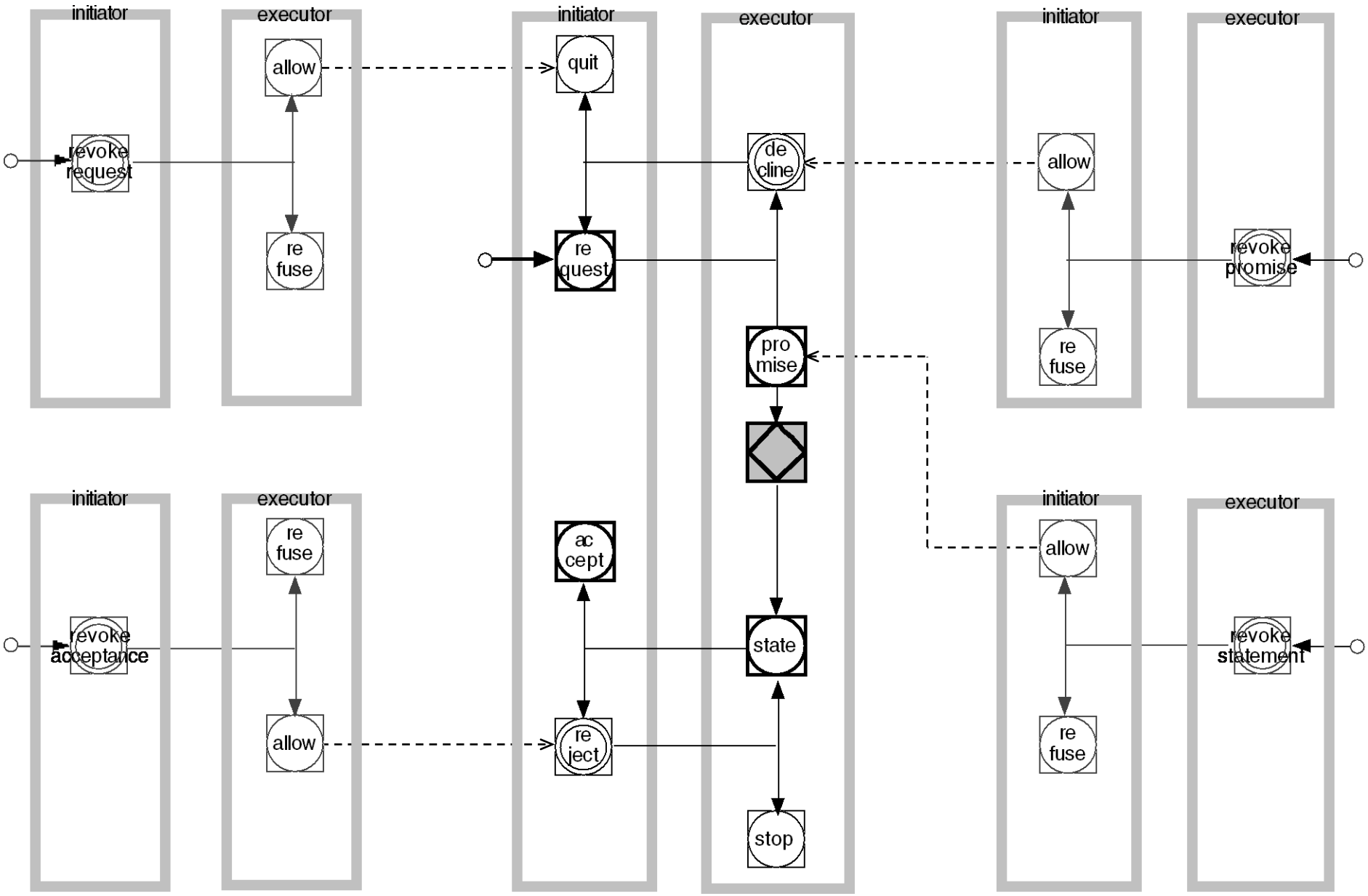
initiator
executor
initiator
executor
initiator
executor
revoke request
allow
re fuse
quit
re quest
de cline
allow
re fuse
revoke promise
pro mise
initiator
executor
initiator
executor
revoke acceptance
re fuse
allow
ac cept
re ject
state
stop
allow
re fuse
revoke statement

The three aspect organisations

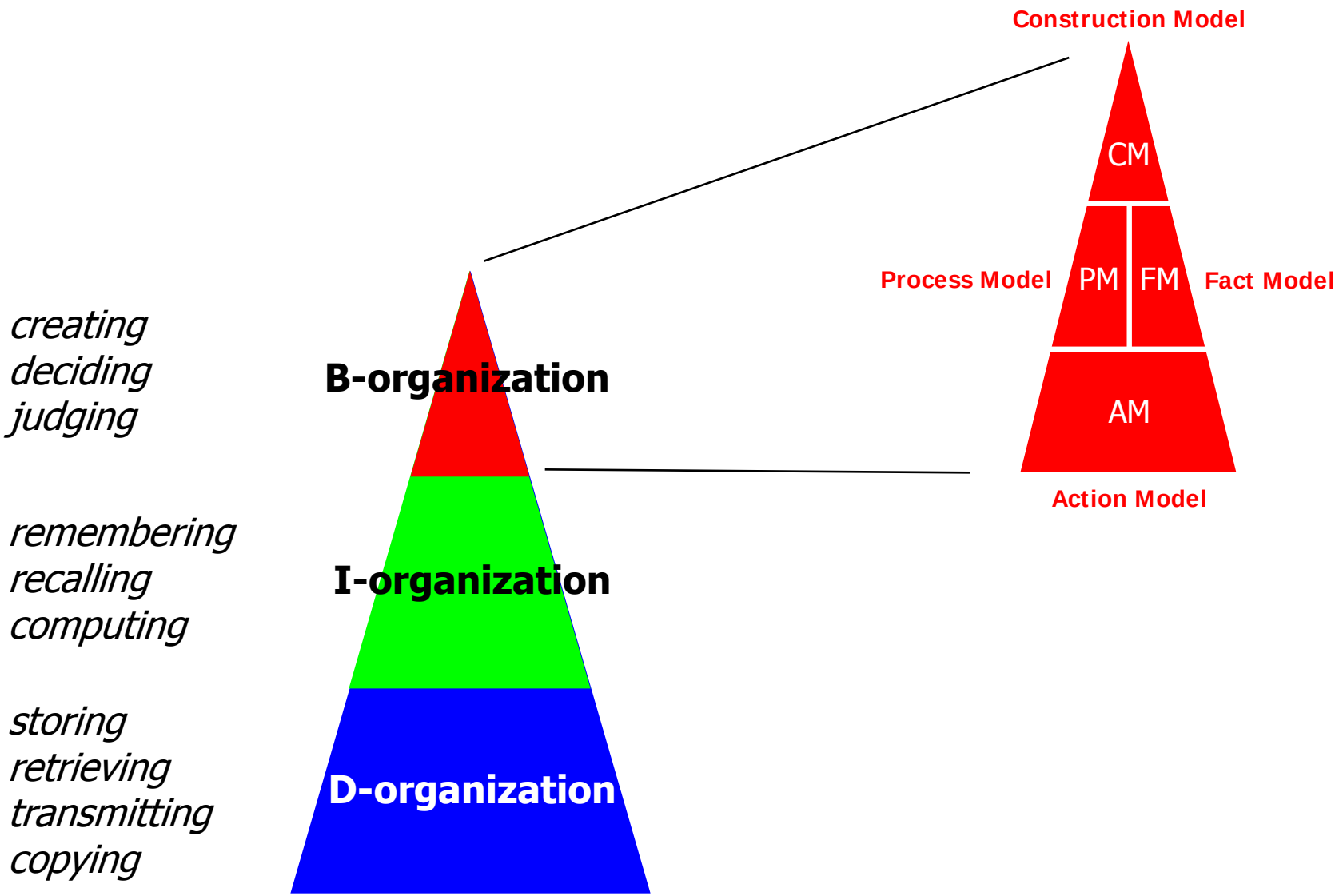

The essential model of an enterprise (2)

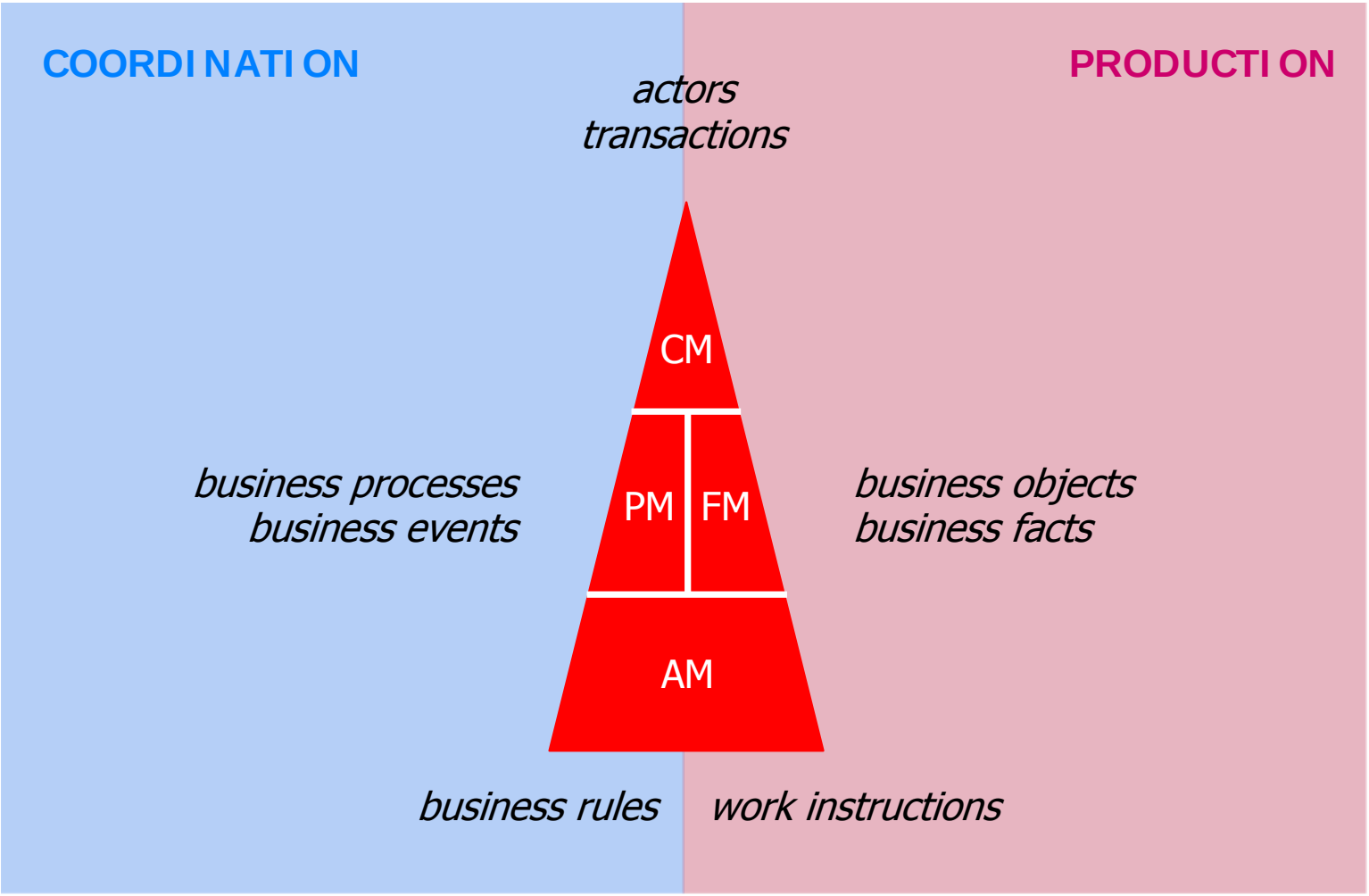

Vraag 3

Kijkend naar het vorige plaatje, wat is het onderscheidende kenmerk van DEMO, vergeleken met andere methoden in organisatie en IT?

MODELLING

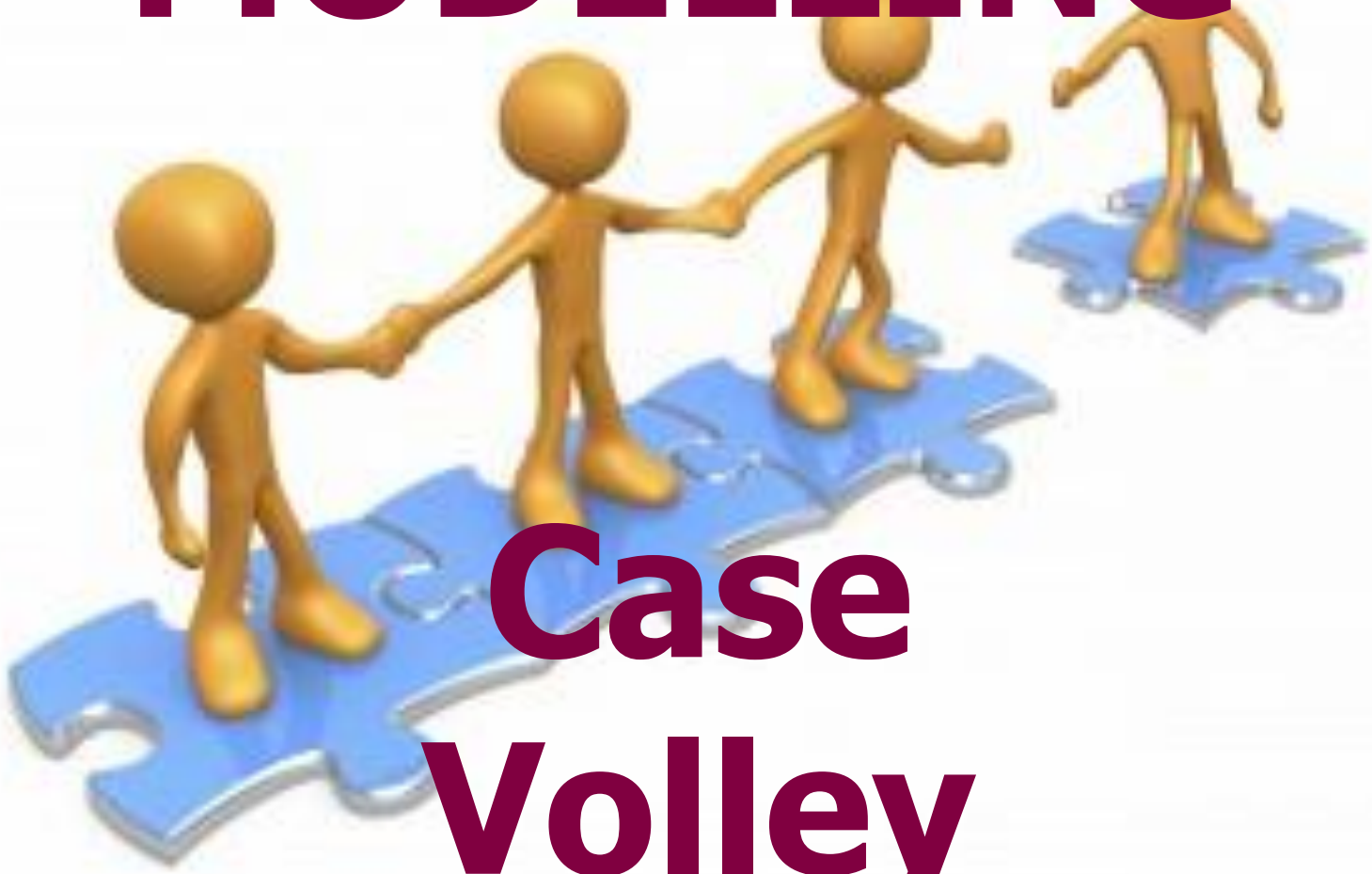

Case Volley

Volley: analysis (1)

T1/rq *One can become member of the tennis club Volley by sending a letter to the club by postal mail. In that letter one has to mention one's surname and first name, birth date, sex, telephone number, and postal mail address (street, house number, zip code, and town). Adam, the administrator of Volley, empties the mailbox daily and checks whether the information provided is complete. If not, he makes a telephone call to the sender in order to complete the data. Once a letter is complete, Adam writes an incoming mail number and the date on the letter, records the letter in the letter book, and puts it in a folder.*

T1/pm *Every Wednesday evening, Adam takes the folder to Eve, the secretary of Volley. He also takes the member register with him. If Eve decides that an applicant can become member of Volley, she stamps 'new member' on the letter and writes the date below it. She then hands the letter to Adam in order to add the new member to the member register. This is a book with numbered lines. Each new member is entered on a new line. The line number is the number by which the new member is referenced in the administration.*

SAPIO

Volley: analysis (2)

Next, Eve calculates the fee that the new member has to pay for the remaining part of the calendar year. She asks Adam for the annual fee, as decided at the general assembly, which Adam has recorded on a sheet of paper in his files. Then, she asks Adam to write down the amount in the member register.

T1/dc *If Eve does not allow an applicant to become member (e.g., because he or she is too young or because the maximum number of members has been reached), Adam will send a letter in which he explains why the applicant cannot (yet) become member of Volley.*

T2/rq *If all applications are processed, Adam takes the letters and the member register home and prepares an invoice to all new members for the payment of the first fee. He sends these invoices by postal mail. Payments have to be performed by bank transfers.*

T2/st **T1/st** *As soon as a bank statement is received, Adam prints a a card on which the membership number, the starting date, the name, the date of birth, the sex, and the residence are mentioned. The card is sent to the new member by postal mail.*

SAPIO

Volley: Flow Chart 1 + analysis

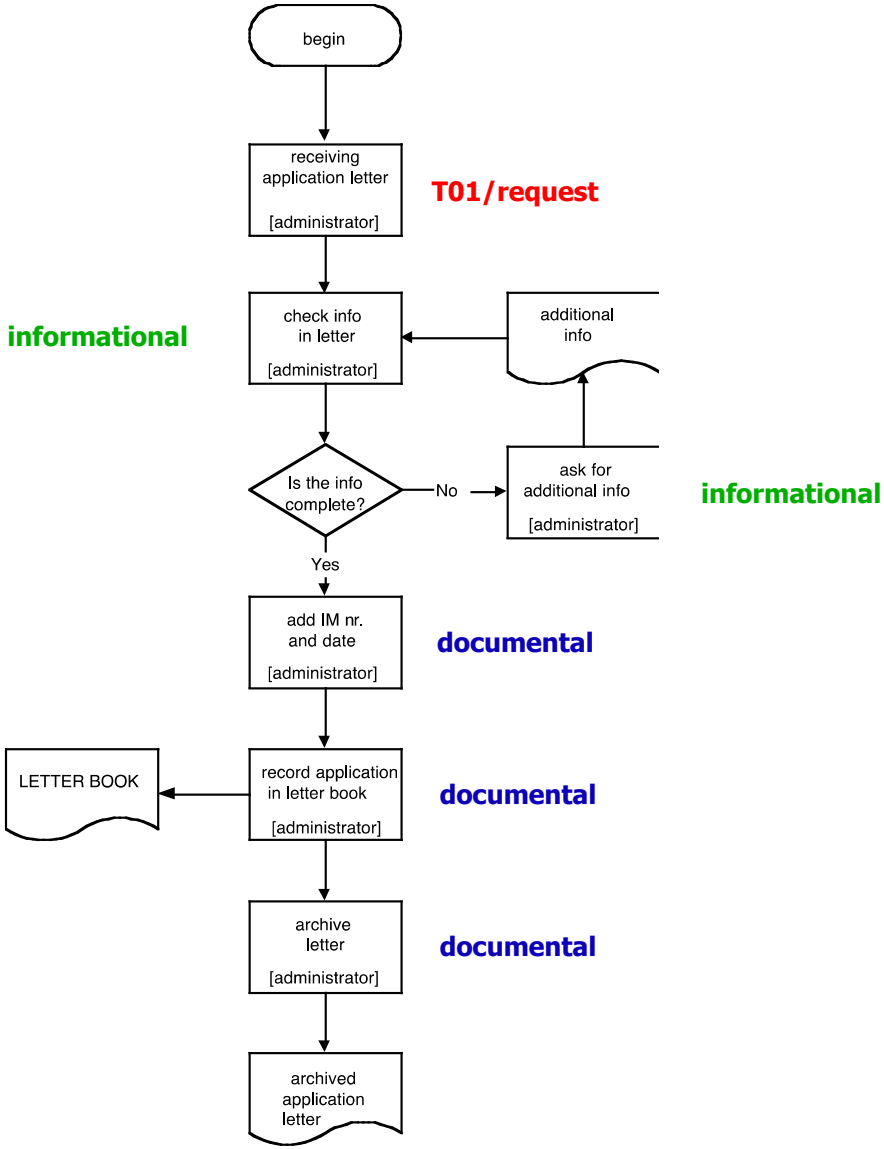

Volley: Flow Chart 2 + analysis

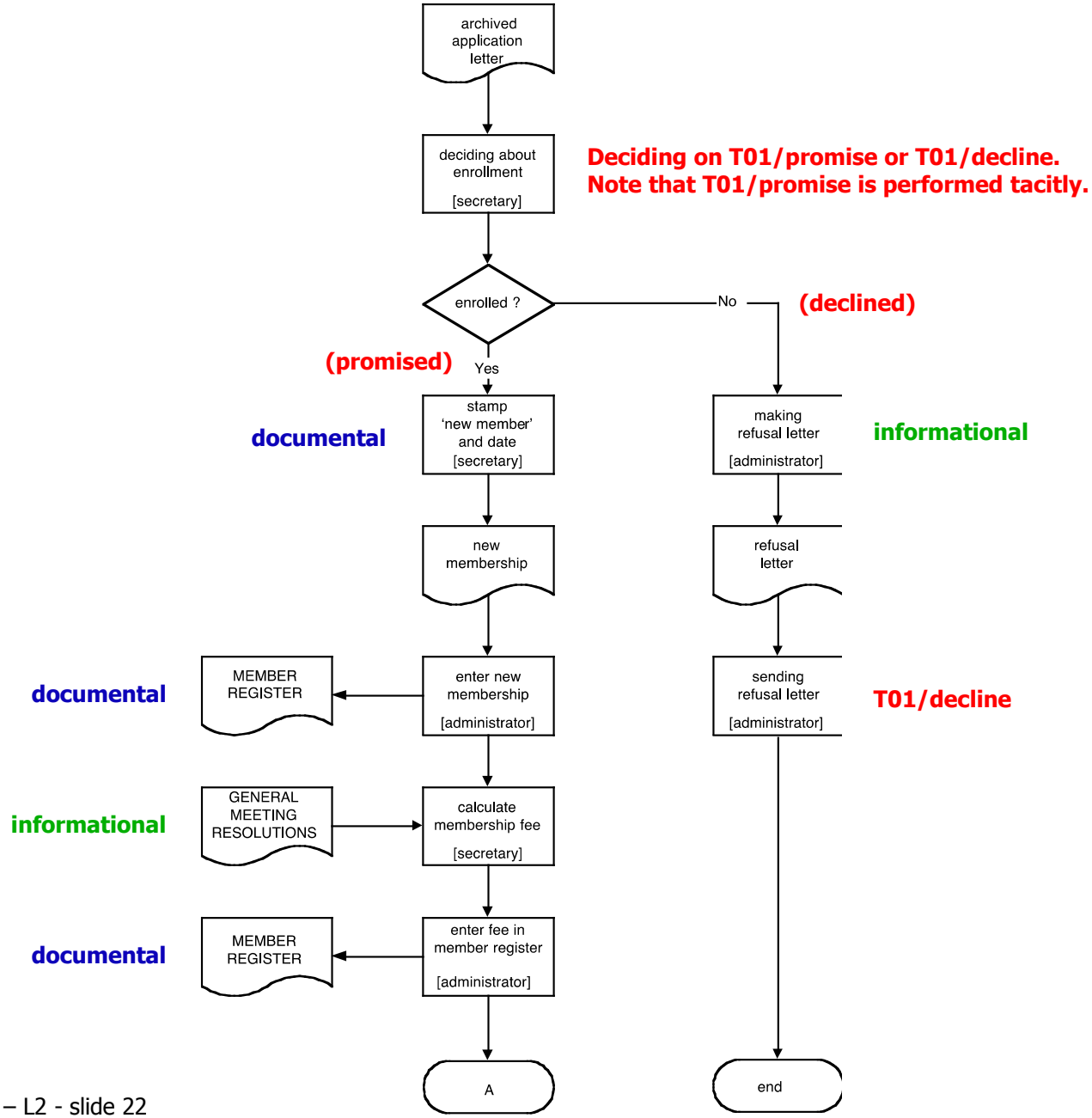

Volley: Flow Chart 3 + analysis

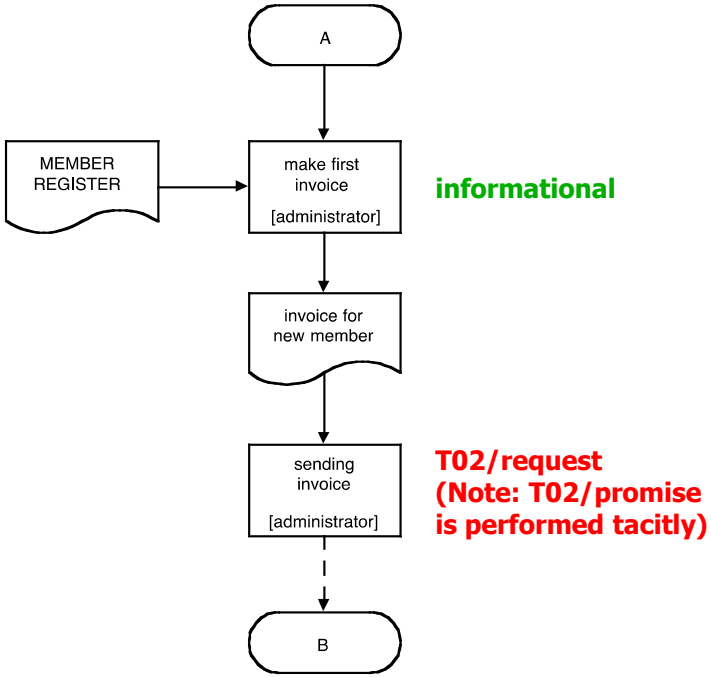

Volley: Flow Chart 4 + analysis

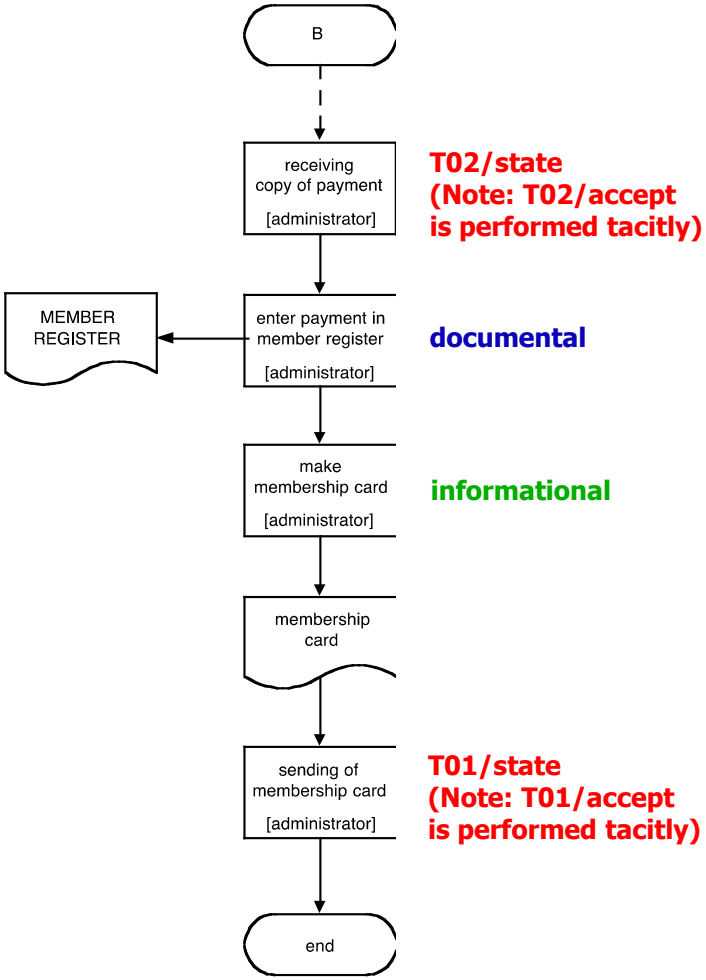

The OER method

OER stands for Organisational Essence Revelation

The OER method for revealing the essential model of an organisation is as simple as effective (provided you understand PSI):

Have a 'real' talk with every member of the organisation. During this talk, ask these questions:

1. What kind of (production) facts do you create?

2. Who is requesting you to do this?

3. Whom do you request to create (production) facts?

On the basis of the answers to these questions, you are able to produce the construction model of the B-organisation.

Volley: Construction Model (1)

Organisation Construction Diagram

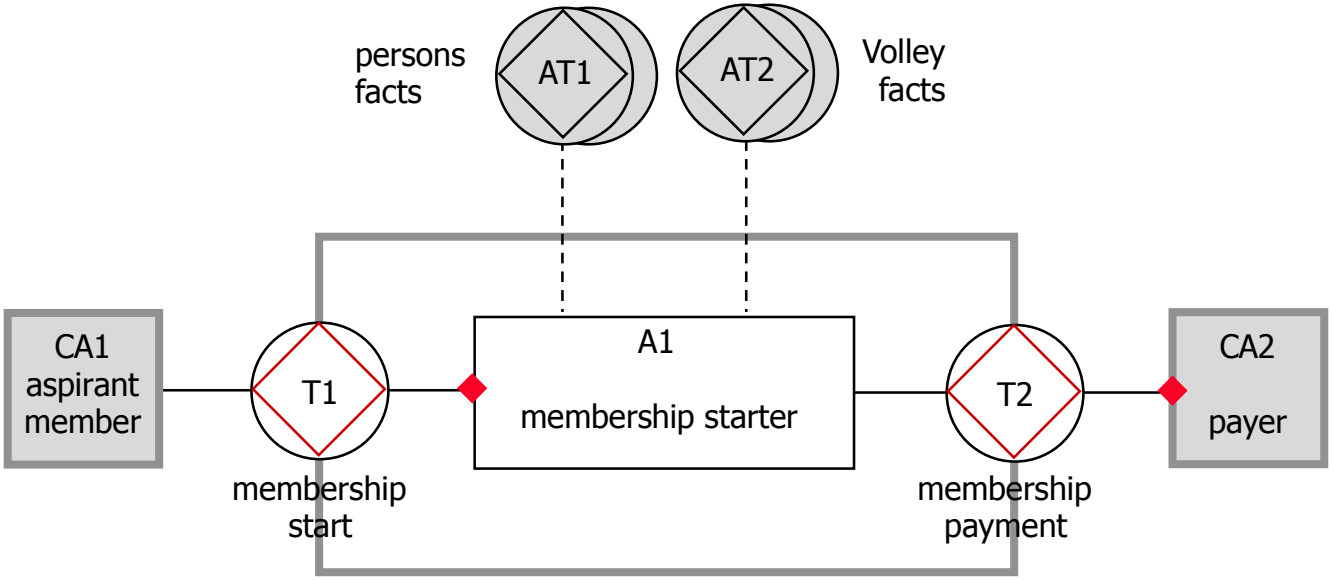

Transaction Product Table

transaction kind	product kind
T1 membership start T2 membership payment	P1 Membership **is** started P2 **the** first fee **of** Membership **is** paid

Volley: Process Model (1)

Process
Structure
Diagram

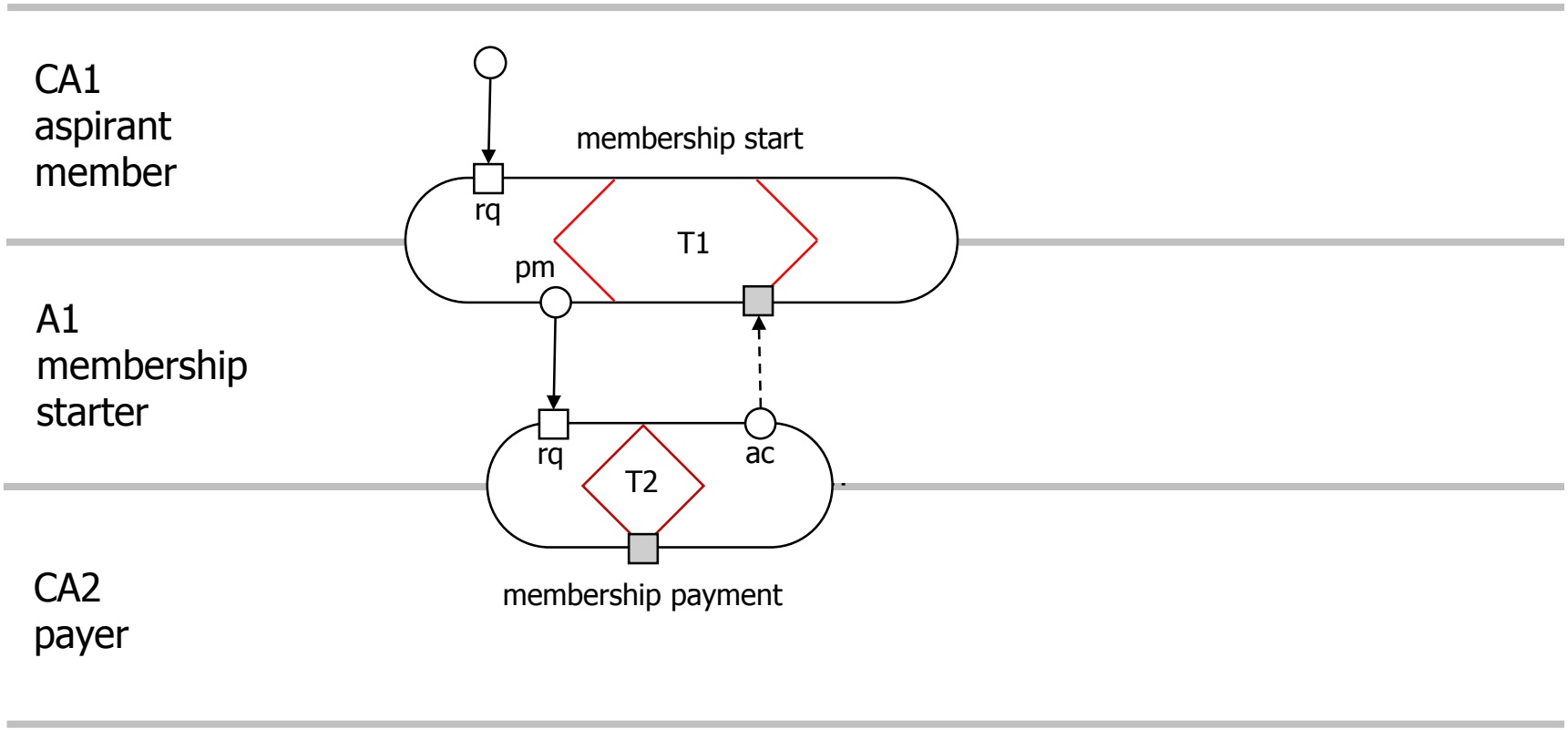

Vraag 4

Wie vervult actorrol A1? Adam of Eva?

Volley: Process Model (2)

Transaction Process Diagram of T1

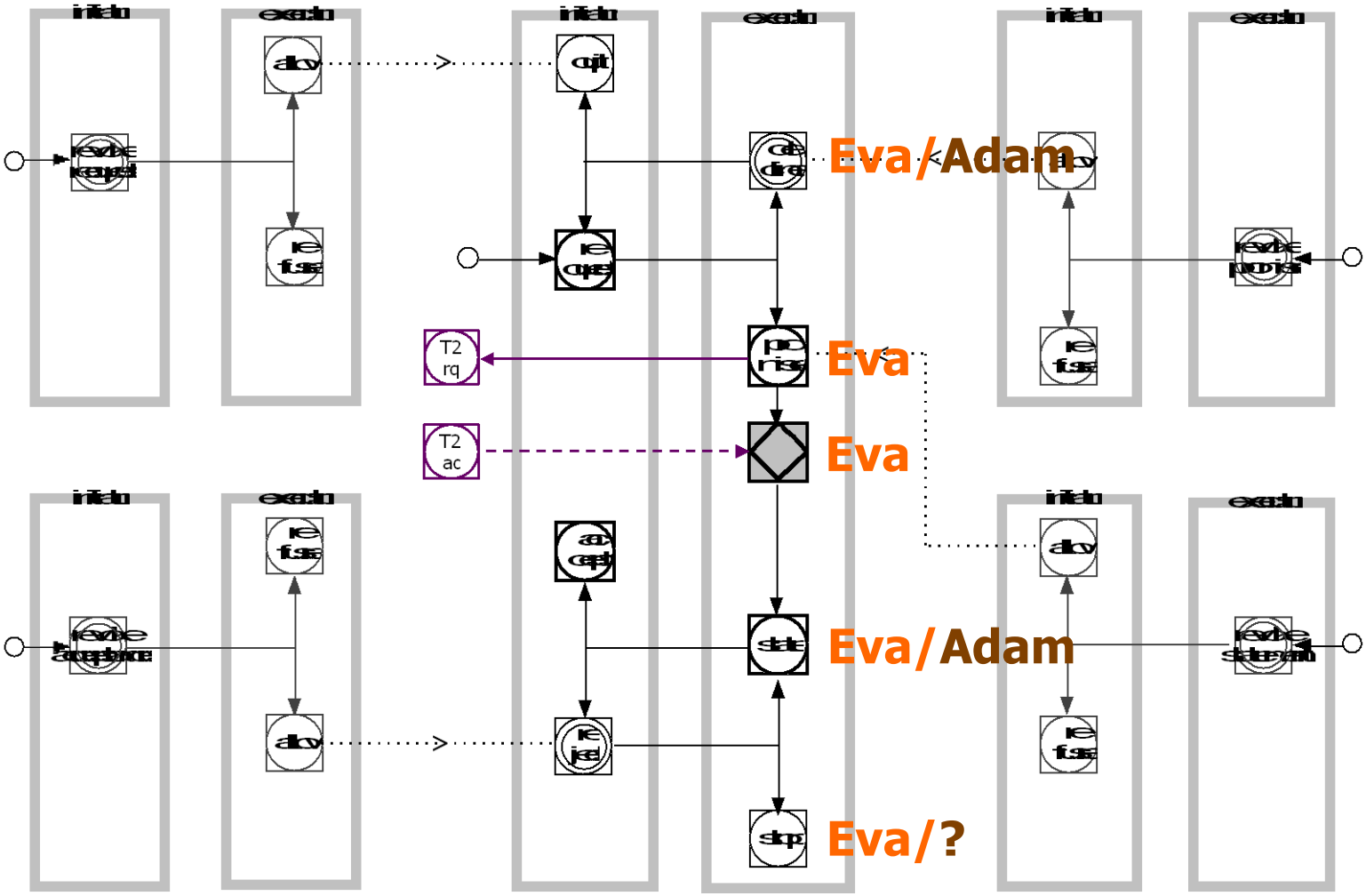

Volley: Process Model (3)

Transaction Process Diagram of T2

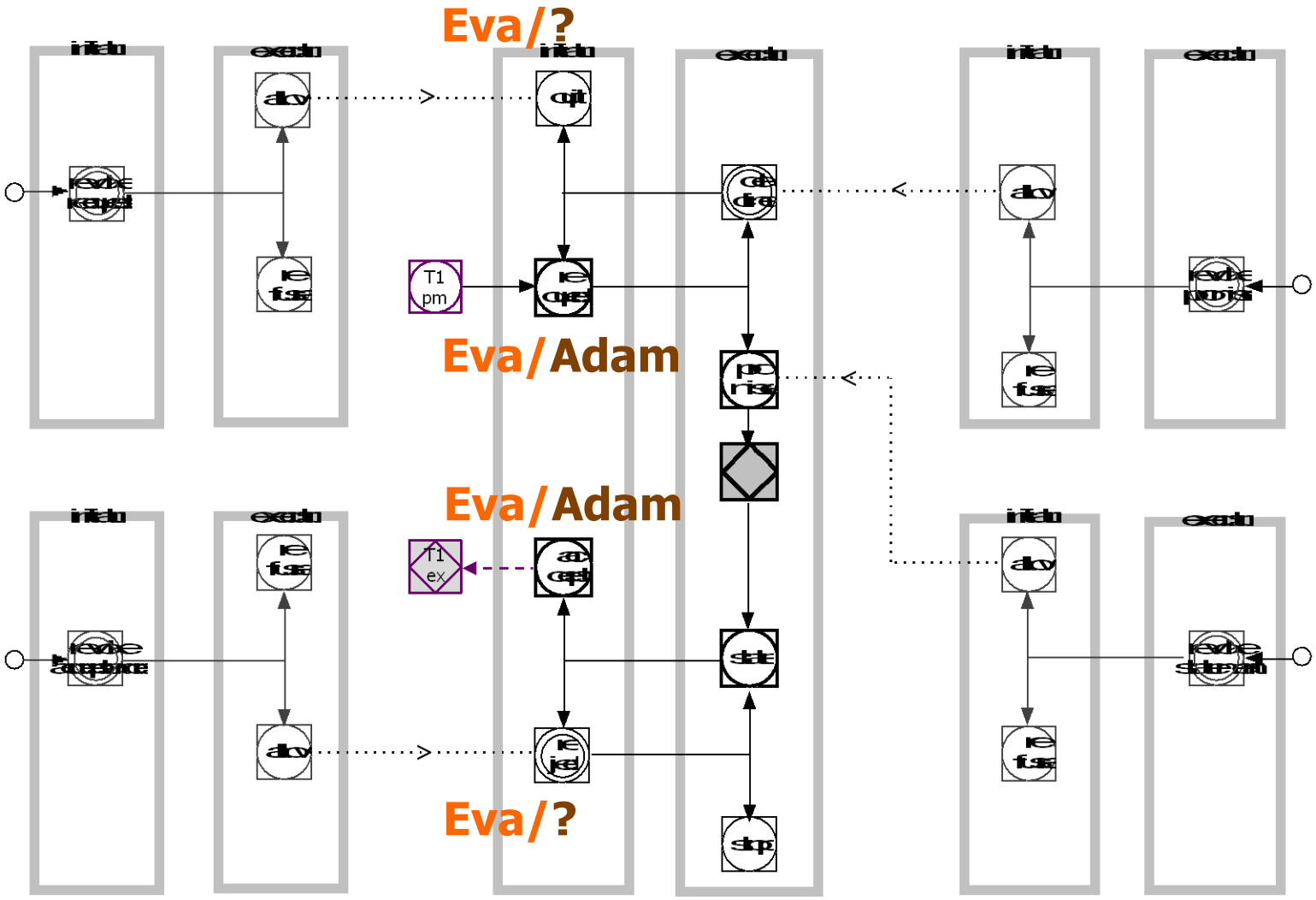

Volley: Action Model - action rules for A01 (1)

when	membership start **for** new Membership is requested		(T1/rq)
	with	**the** member **of** Membership **is a** Person	
		the starting day **of** Membership **is a** Day	
assess	*justice:*	**the** performer **of the** request **is the** (aspirant) member **of** Membership	
	sincerity:	< no specific condition >	
	truth:	Day **is the** first day **of some** Month;	
		Month **is greater than** Current Month;	
		the age **of** Person **is equal to or greater than the** minimal age **in the** year **of** Day;	
		the number of members **on** Day **is less than the** max members **in the** year **of** Day	
if	*complying with request is considered justifiable*		
then	promise	membership start **for** Membership	[T1/pm]
else	decline	membership start **for** Membership	[T1/dc]

event part

assess part

response part

SAPIO

Summary of the ontological aspect models

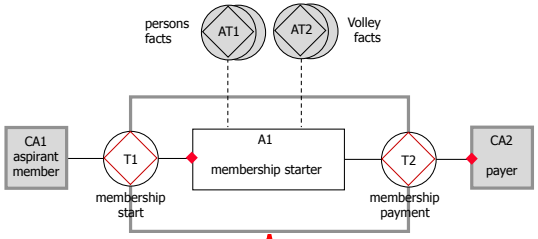

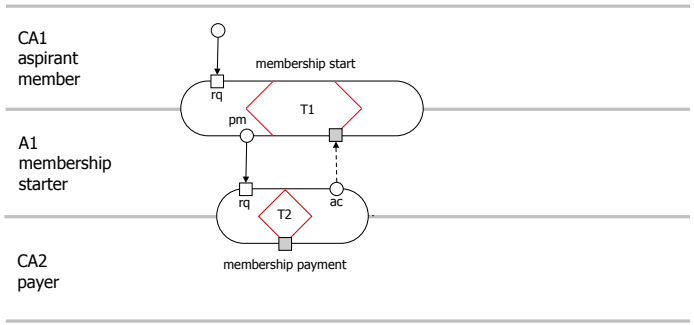

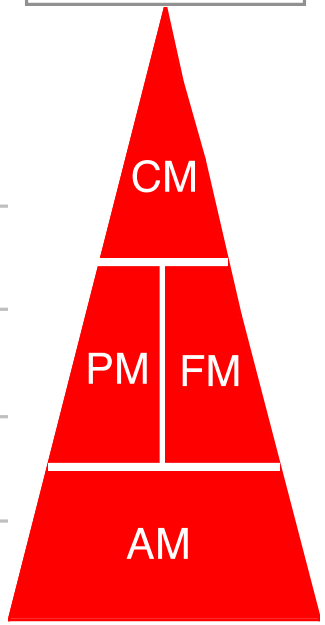

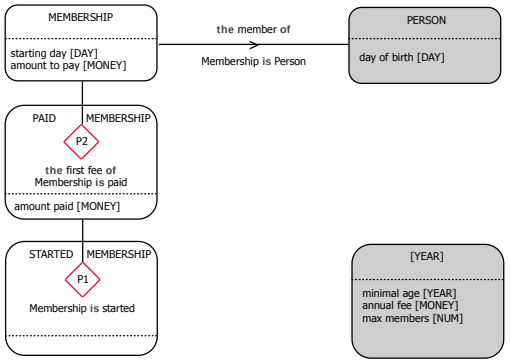

when	membership start **for** new Membership is requested		(T1/rq)
	with	**the** member **of** Membership **is a** Person	
		the starting day **of** Membership **is a** Day	
assess	*justice:*	**the** performer **of the** request **is the** (aspirant) member **of** Membership	
	sincerity:	< no specific condition >	
	truth:	Day **is the** first day **of some** Month;	
		Month **is greater than** Current Month;	
		the age **of** Person **is equal to or greater than the** minimal age **in the** year **of** Day;	
		the number **of** members **on** Day **is less than the** max members **in the** year **of** Day	
if	*complying with request is considered justifiable*		
then	promise	membership start **for** Membership	[T1/pm]
else	decline	membership start **for** Membership	[T1/dc]

Conclusions

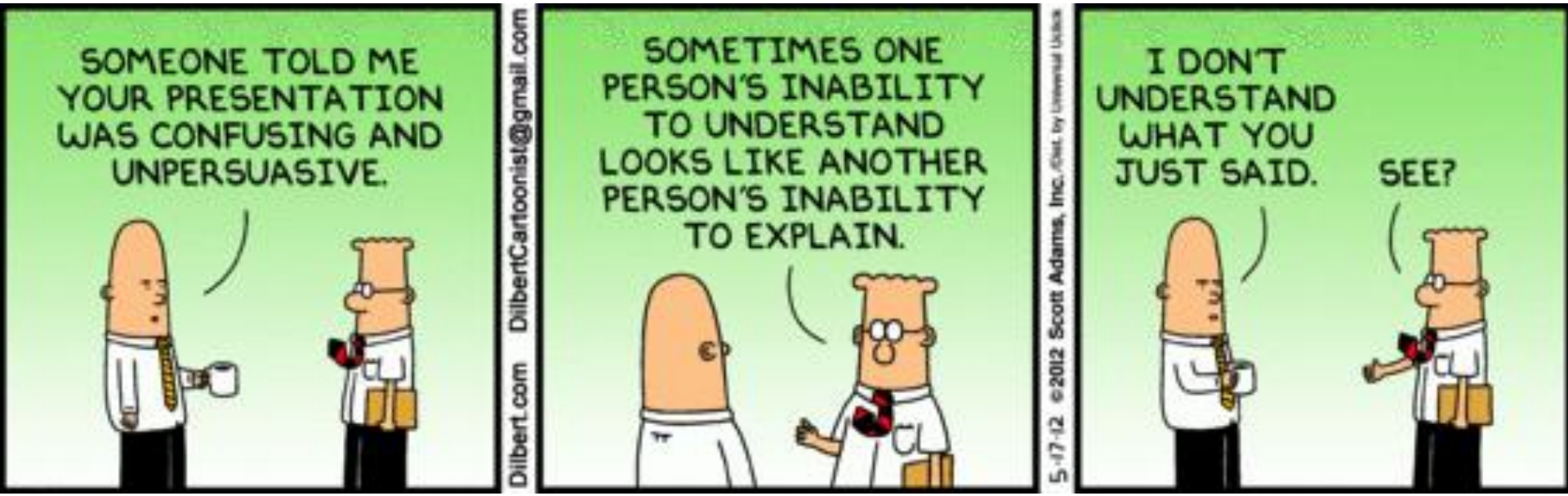

www.ciaonetwork.org

www.ee-institute.com